LID

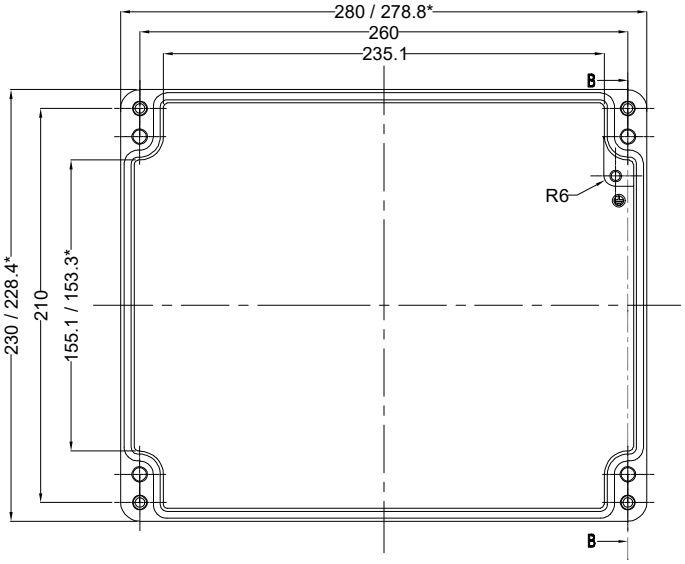

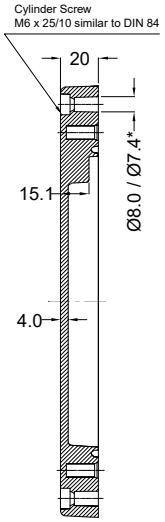

SECTION B-B

BASE

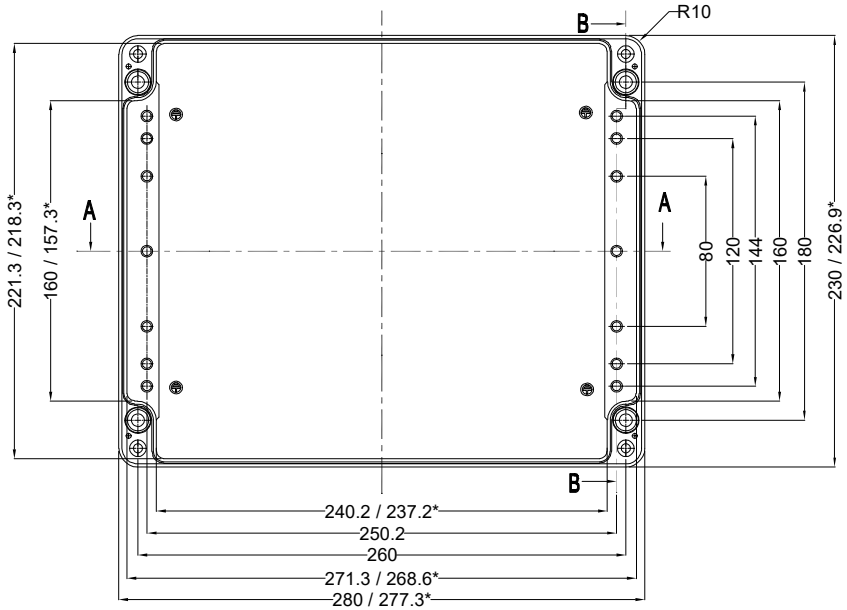

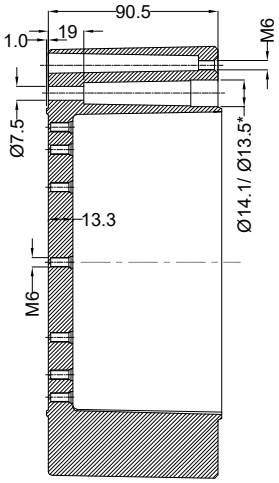

SECTION B-B

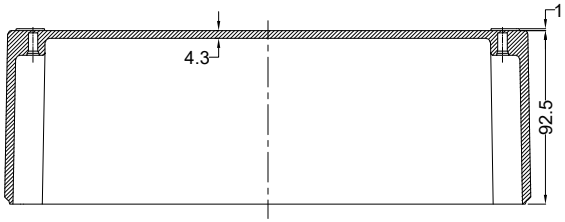

SECTION A-A

*=Conical form tapering downwords
Free dimensions-tolerance to GTA 13/5DIN 1688

Description	Rev.	Date

Material:- AlSi12	TITLE :- ALUMINIUM JUNCTION BOX 280 X 230 X 110	This drawing and any information or descriptive material set out on it are the confidential property of Company Name and MUST NOT BE DISCLOSED, COPIED in whole or part or used for any purpose without the written permission of Company Name.
Finish:- Natural / RAL 7001 Grey		
General Tolerances DIN ISO - Linear Tol.: , Angular Tol.:- Surface Finish: All Dimensions: mm		DRAWN BY: PK — DATE 22/4/22 CHECKED BY: GA — DATE 22/4/22
FIRST ANGLE PROJECTION DO NOT SCALE	OERIGO OERIGO GLOBAL PRIVATE LTD	CODE: OGAJB17 DRG. NO. OG-AJB-280230110 — REV 00 SHEET 1 OF 1