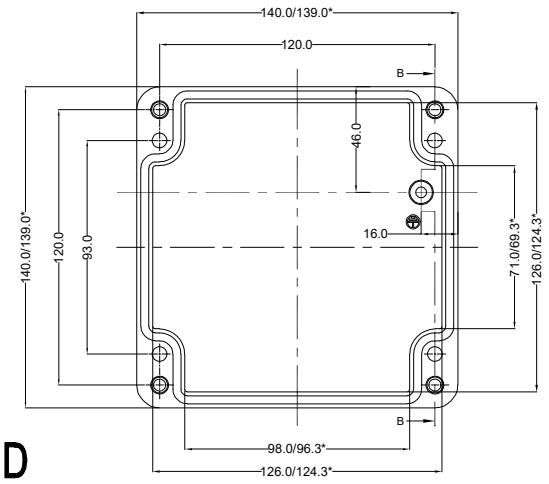

LID

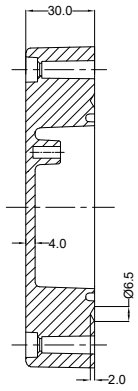

SECTION B-B

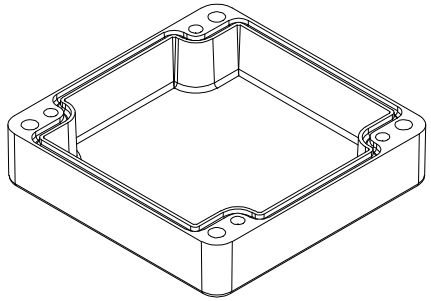

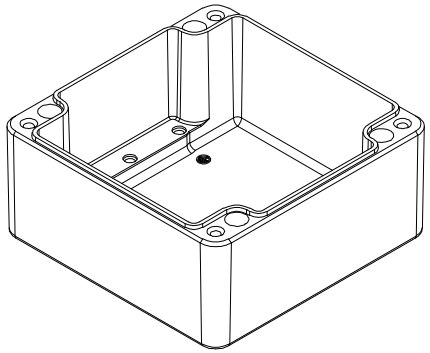

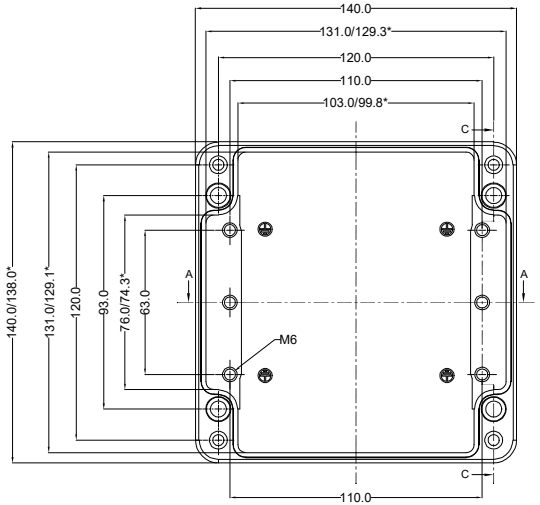

BASE

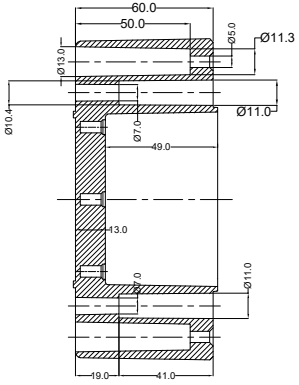

SECTION C-C

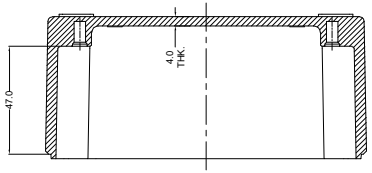

SECTION A-A

*=Conical form tapering downwords
Free dimensions-tolerance to GTA 13/5DIN 1688

Material:- AlSi12	TITLE :- ALUMINIUM JUNCTION BOX 140 X 140 X 91	This drawing and any information or descriptive material set out on it are the confidential property of Company Name and MUST NOT BE DISCLOSED, COPIED in whole or part or used for any purpose without the written permission of Company Name.
Finish:- Natural / RAL 7001 Grey		
General Tolerances DIN ISO - Linear Tol.: , Angular Tol.:- Surface Finish: All Dimensions: mm		DRAWN BY: PK — DATE 22/4/22 CHECKED BY: GA — DATE 22/4/22

Description	Rev.	Date

FIRST ANGLE PROJECTION

DO NOT SCALE

OERIGO
OERIGO GLOBAL PRIVATE LTD

CODE: OGAJB36

DRG. NO. OG-AJB-14014091 — REV 00

SHEET 1 OF 1